VS12-LE-S70

Contact

Jutta Geurtz
+49 2336 808 364
jgeurtz@titan-schwelm.de

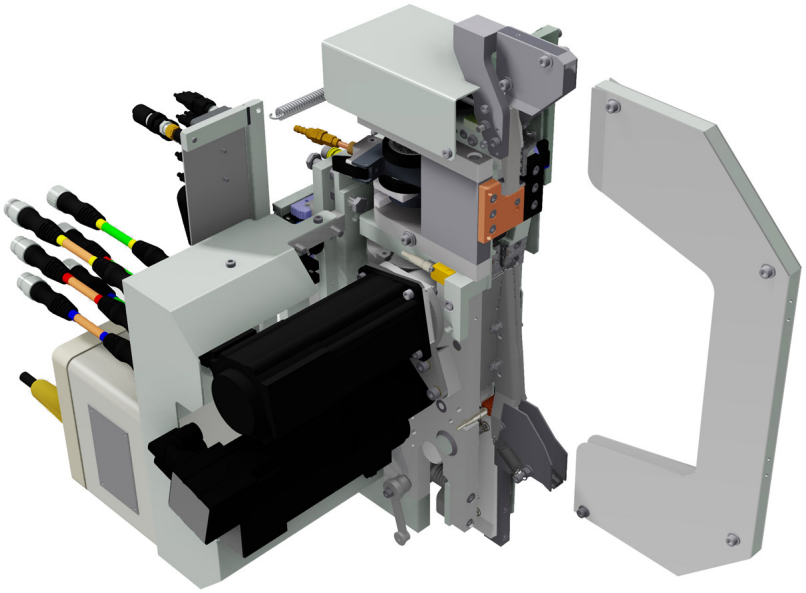

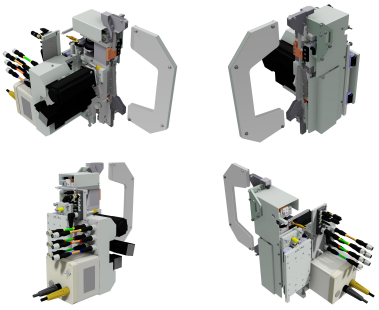

The VS12-L series

As the VS11-L series, also the VS12-L strapping aggregate is either powered electro-pneumatically or 100% electrically. To increase the service availability of our strapping aggregates the drive mechanism of the VS11-L and VS12-L series is identical, except the sealing unit itself which is adopted to the joint technology

With the new VS12-L strapping aggregate range TITAN offers its customers brilliant technical features for load security with steel strapping.

Two versions of VS12-L steel strapping aggregates are available: The VS12-L LD for light-duty applications and the VS12-L HD for heavy-duty applications.

Absolutely unique, strap thickness up to 1.0 mm (0.040") MEGABAND® can be handled with this aggregate

Technical Data

Kind of drive	Electro pneumatic
Tension force	1,000 - 10,000 N (adjustable)
Control voltage	24 V
Welding voltage (TITANARG®)	400 V ; 460 V
Strap conveying speed	ca. 3,6 m/s with 0,50 - 0,80 mm in strap thickness appr. 11.8 ft/s with 0.02 - 0.031 in strap thickness
Dimensions	410 x 450 x 570 mm (L x B x H) 16.1 x 17.7 x 22.4" (L x W x H)

Copyright TITAN Umreifungstechnik, GmbH & Co. KG | Berliner Straße 51-55 | 58332 Schwelm | Deutschland
Contakt: Jutta Geurtz | +49 2336 808 364 | jgeurtz@titan-schwelm.de

Weight	ca. 120 kg 264.5 lb
Gas consumption	appr. 2 l per seal
Temperature range (Hot / Cold)	Cold

Strap/Joint

Type of strap	Steel strap
Strap	Automatenband MEGABAND® Megaflex
Strap width	13, 16 mm 1/2" ; 5/8"
Strap thickness	0.50 - 0.63 mm 0.02 - 0.025"
Kind of seal	TIG welding joint
Sealing strength (depending on strap quality, strap dimensions)	approx. 80 - 90% of the strap breaking load

Minimum bearing area

Expansive package	70 mm 2.8 in
Slit coil ring	80 mm 3.2 in
Hexagon pipe bundle	85 mm 3.3 in
Round package	Ø 400 mm Ø 15.7 in

Application

Bundling, stacking and securing of packages such as slit coils, sheet packages, structural timber, profile bundles etc.

Copyright TITAN Umreifungstechnik, GmbH & Co. KG | Berliner Straße 51-55 | 58332 Schwelm | Deutschland
Contakt: Jutta Geurtz | +49 2336 808 364 | jgeurtz@titan-schwelm.de